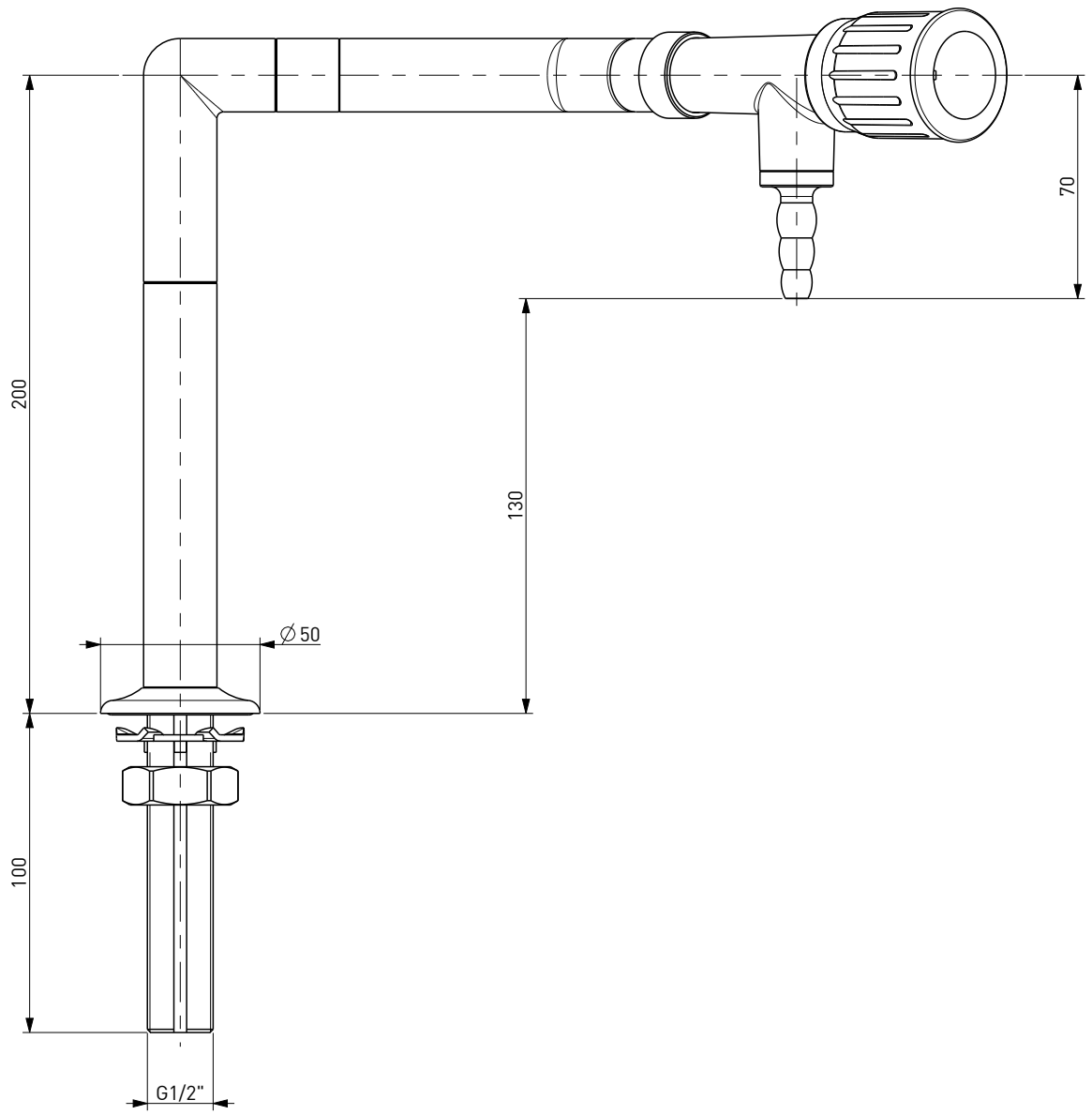
200
130
70
∅50
100
G1/2"

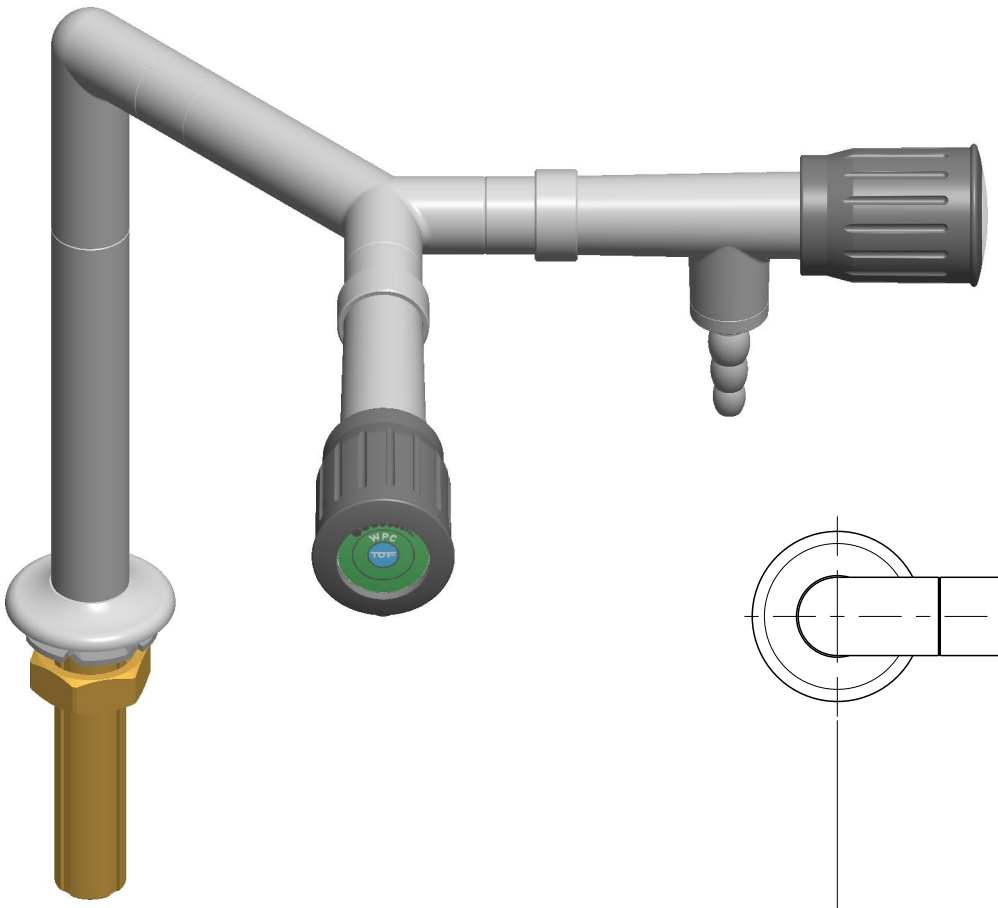
WPC
TOP

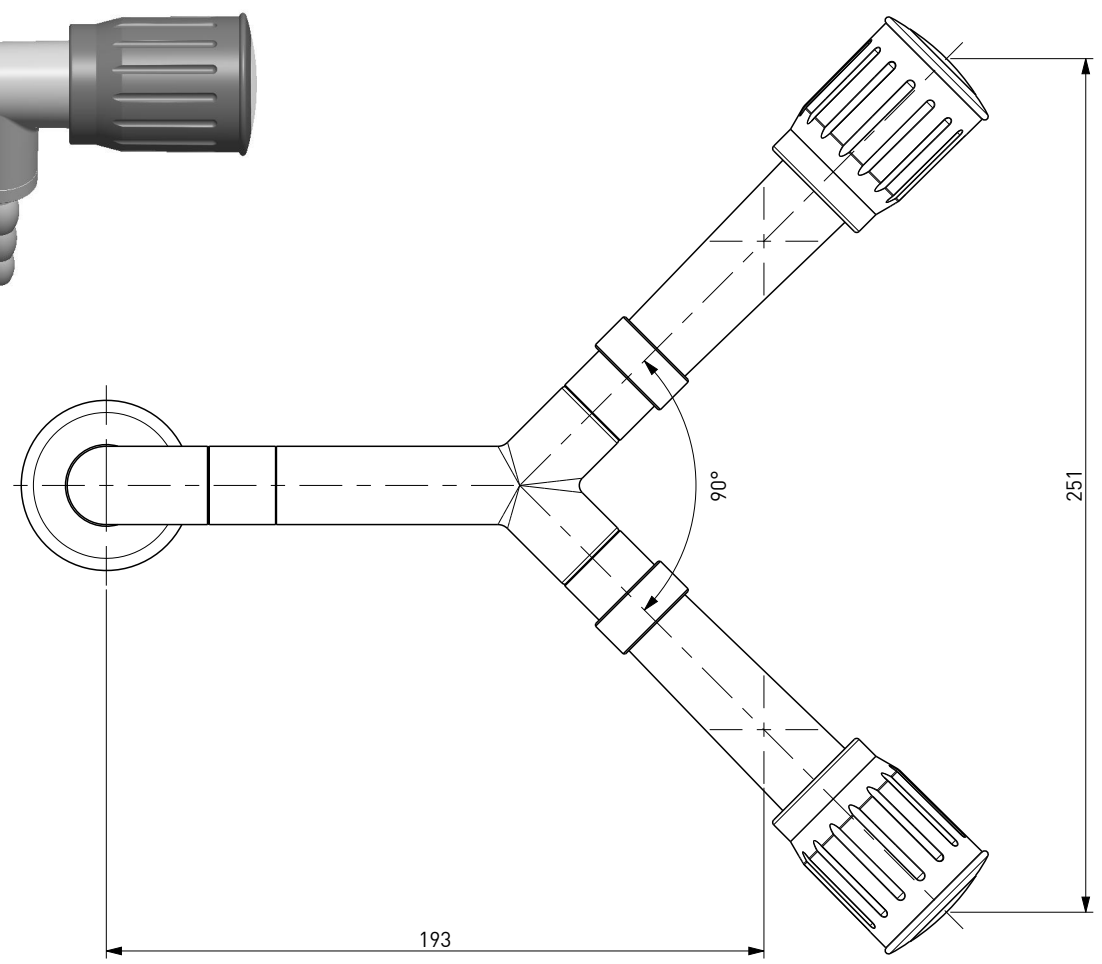
90°
251
193